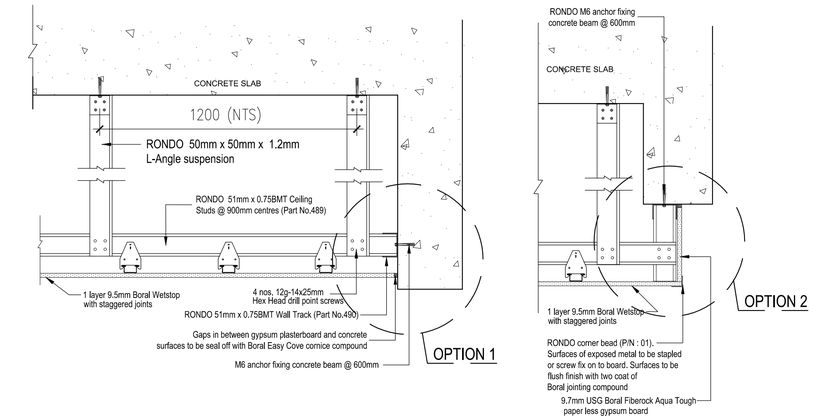

1 CEILING SYSTEM – TYPICAL END FIXING DETAILS (C3)

SCALE = N.T.S

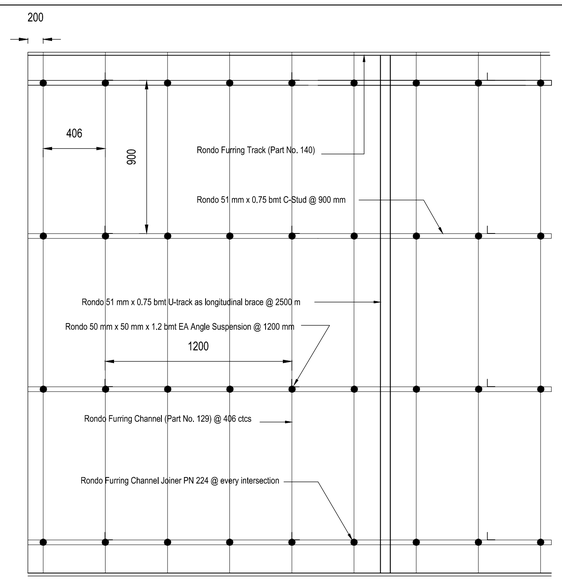

2 TYPICAL FRAMING LAYOUT

SCALE = N.T.S

	(G)	9.5MM THK. BORAL UNISPAN GYPSUM BOARD WITH STAGGERED JOINT SCREW FIX ON TO RONDO KEYLOCK SYSTEM. BOARD JOINT TO BE FLUSH FINISHED WITH 50MM WIDTH BORAL PERFORATED PAPER TAPE & BORAL JOINTING COMPOUND
	(G1)	12.5MM THK. BORAL ECHOSTOP SOUND ABSORTION GYPSUM BOARD AS CENTRE CORE AND 12.5MM BORAL STANDARD CORE AS BORDER WITH STAGGERED JOINT SCREW FIX ON TO RONDO KEYLOCK SYSTEM. 50MM THICK ROCKWOOL INSULATION (DENSITY 80KG/M3) LAY ON TOP PLASTERBOARD. BOARD JOINT TO BE FLUSH FINISHED WITH 50MM WIDTH BORAL PERFORATED PAPER TAPE & BORAL JOINTING COMPOUND
	(G2)	2 LAYERS OF 12.5MM THK. BORAL STANDARD CORE AS SOUND INSULATION CEILING SYSTEM WITH STAGGERED JOINT SCREW FIX ON TO RONDO KEYLOCK SYSTEM. 50MM THICK BORAL SOUNDBLOCK GLASSWOOL INSULATION (DENSITY 14KG/M3) LAY ON TOP PF PLASTERBOARD. BOARD JOINT TO BE FLUSH FINISHED WITH 50MM WIDTH BORAL PERFORATED PAPER TAPE & BORAL JOINTING COMPOUND
	(AG)	600mm x 1200mm x 15mm THK. USG BORAL MINERAL FIBRE BOARD (PATTERN : RADAR /IMPRESSION/ PINPER CLIMAPLUS) COME WITH USG DON MAIN TEE SYSTEM SUSPENDED BY BORAL 3MM DIAMETER ROD WITH BORAL ADJUSTABLE BUTTERFLY CLIP.
	(AG1)	600mm x 1200mm x 15mm THK. USG BORAL MINERAL FIBRE BOARD (PATTERN : RADAR /IMPRESSION/ PINPER CLIMAPLUS) BOARD EDGE : FINE LINE BEVEL (FLB) COME WITH USG DON MAIN TEE SYSTEM SUSPENDED BY BORAL 3MM DIAMETER ROD WITH BORAL ADJUSTABLE BUTTERFLY CLIP.
	(C)	9.5MM THK. BORAL WETSTOP GYPSUM BOARD WITH STAGGERED JOINT SCREW FIX ON TO RONDO KEYLOCK SYSTEM. BOARD JOINT TO BE FLUSH FINISHED WITH 50MM WIDTH BORAL PERFORATED PAPER TAPE & BORAL JOINTING COMPOUND
	(C2)	600mm x 1200mm x 9.5mm THK. USG BORAL VINYL LAMINATED GYPSUM BOARD (PATTERN : CAPRICORN/AQUARIUS/TAURUS) COME WITH BORAL MAIN TEE SYSTEM SUSPENDED BY BORAL 3MM DIAMETER ROD WITH BORAL ADJUSTABLE BUTTERFLY CLIP.
	(C3)	600mm x 1200mm x 9.5mm THK. USG BORAL WETSTOP SEMI-EXTERNAL CONCEALED GYPSUM BOARD WITH STAGGERED JOINT SCREW FIX INTO RONDO ZINCALUME COATED STEEL SYSTEM (TO WINDSTAND UPLIFT OF WIND LOAD) BOARD JOINT TO BE FLUSH FINISHED WITH 50MM WIDTH BORAL PERFORATED PAPER TAPE BORAL JOINTING COMPOUND.
	(P3)	SKIM COAT WITH PAINT FINISH.
	(SC)	1200 x 300 PERFORATED ALUMINIUM PANEL (RANDOM LAY PATTERN)
	(SC1)	600mm x 600mm ALUMINIUM CLIP-IN NON-PERFORATED CEILING PANEL WITH ALUMINIUM GRID SUSPENSION SYSTEM.
	(SC2)	POWDER COATED METAL WITH ALUMINIUM STRIP CEILING
	(FR)	BORAL 2 HOUR FIRE RATED SUSPENDED CEILING SYSTEM COMPRISING OF 2 LAYERS OF 16MM THICK BORAL FIRE STOP PLASTERBOARD WITH STAGGERED JOINTS AS CENTER CORE SCREW FIXED ONTO RONDO ZINCALUME COATED KEYLOCK STEEL CEILING SYSTEM(TOP CROSS RAIL (P/N: 128) AT 900MM C/C, FURRING CHANNEL (P/N: 129) AT 600MM C/C ; ADJUSTABLE SUSPENSION CLIP(P/N: 2534) AND RONDO SUSPENSION ANGLE BRACKET(P/N: 274) FASTEN TO ROOF PURLIN USING METAL TEKS SCREWS) OR RONDO AND ALSO SUSPENDED BY 5MM HANGER RODS.

Hak Cipta Terpelihara. Tidak dibenarkan mencetak mana-mana bahagian ilustrasi dalam apa jua bentuk dan dengan apa cara pun samada secara elektronik, mencetak, mekanik, rakaman atau cara lain sebelum mendapat kebenaran bertulis dari **NRY ARCHITECTS SDN. BHD.**

REV.	DATE	DESCRIPTION	REMARK
A	29.06.2016	FIRST ISSUED FOR CONSTRUCTION DRAWING	FARID

KEY PLAN :

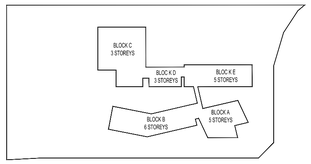

PROJECT TITLE :

CADANGAN MEMBINA SEBUAH KOLEJ UNIVERSITI SWASTA DI ATAS PT 5828, PERSIARAN CASSIA BARAT 3, BATU KAWAN, MK. 13, SEBERANG PERAI SELATAN YANG MENGANDUNGI :

BLOK A - PUSAT PENTADBIRAN 5 TINGKAT
BLOK B - PERPUSTAKAAN DAN BILIK KULIAH 6 TINGKAT
BLOK C - BANGUNAN AKADEMIK DAN DEWAN SERBAGUNA 3 TINGKAT DENGAN PODIUM
BLOK D - DEWAN KULIAH DAN KAFETERIA 3 TINGKAT
BLOK E - BANGUNAN AKADEMIK 5 TINGKAT
2 UNIT PONDOK PENGAWAL DAN
1 UNIT TNB 11 KV STESEN SUIS UTAMA

UNTUK : TETUAN KDU COLLEGE (PG) SDN. BHD

LAND OWNER & BUILDING OWNER :

NAMA : DR. CHONG BENG KEOK
JAWATAN : KETUA PEGAWAI EKSEKUTIF (CEO)
NO IC : 610612 - 02 - 5048
ALAMAT : KDU COLLEGE (PG) SDN BHD
32, JALAN ANSON,
10400, GEORGE TOWN, PULAU PINANG
NO. TEL : 604 - 2386368

KITCHEN SPECIALIST :
DISHES SDN BHD
NO. 21-1, JALAN SEMENYIH SENTRAL 1,
SEMENYIH SENTRAL,
SEMENYIH, 43500 SELANGOR
TEL : +603-872-71201
email : info@dishes.com.my
webmail : www.dishes.com.my

QS CONSULANT :
UNITECH QS CONSULTANCY SDN. BHD.
12A-A, MENARA NORTHAM,
55, JALAN SULTAN AHMAD SHAH,
10050 PENANG

M&E CONSULANT :
PERUNDING P.L.A.
Consulting Mechanical & Electrical Engineers.
8-01, WISMA PANTAI,
JALAN WISMA PANTAI,
12200 BUTTERWORTH, PENANG.
TEL NO. : (604) 3337990
FAX NO. : (604) 3317337
E-MAIL : project@pla-group.com

C&S CONSULANT :
PERUNDING KELANA
CIVIL & STRUCTURAL ENGINEERS
Level 12, Unit 12(D), Wisma Boon Siew,
No.1, Penang Road, 10000 Penang.
Tel: 2622628, Fax: 2641618
(Company No. AS0232772-W)

DESIGN ARCHITECT :
ARCHITECTURE GROUP - STUDIO A
CPG CONSULTANTS PTE LTD
23BB, THOMSON ROAD, #12-00 TOWER B
NOVENA SQUARE, SINGAPORE 307685
TEL : +65 6357 4468 FAX : +65 6357 4469

ARCHITECT :
BH YEW ARCHITECT (SP/Y61)
15TH FLOOR, BANGUNAN AMMETLIFE
NO.1, JALAN LUMUT, 50400 KUALA LUMPUR
TEL: (03) 4043-1346 FAX: (03) 4043-1349
EMAIL: yobhwa@nrasb.com.my
LEMBAGA ARKITEK MALAYSIA
Ar. YEW BU HWA
ARKITEK PROFESIONAL
No.Pendaftaran LAM: A/Y61

Saya mengesahkan bahawa pelan-pelan yang dihantar adalah mengikut Undang-Undang Kecil Bangunan Seragam 1986 dan Undang-Undang Kecil Bangunan Seragam (pindaan) 2007 [UKBS2007] dan pindaan-pindaan serta garipandunan-garipandunan dan polisi-polisi Majlis Perbandaran Seberang Perai.
Saya mengesahkan bahawa kerja-kerja pembinaan akan dijalankan dibawah pengeliaan saya.
Saya mengesahkan dan mengaku bahawa pelan-pelan bangunan adalah selaras dengan pelan kebenaran merancang yang diluluskan dan akan memenuhi ulasan serta syarat-syarat jabatan teknikal.

CONSTRUCTION DRAWING

DRAWING TITLE :

CEILING DETAIL-02

SCALE :	CAD NO. :				
AS SHOWN	553_CA-711-02_A.dwg				
DRAWN BY : ILA	CHECK BY : Mr. Farid		DATE : JUNE 2016		
PROJECT NO. :	STATUS	BLOCK	DWG. NO.	DWG. NO.	REVISION
55314	CA	RCP	711	02	A

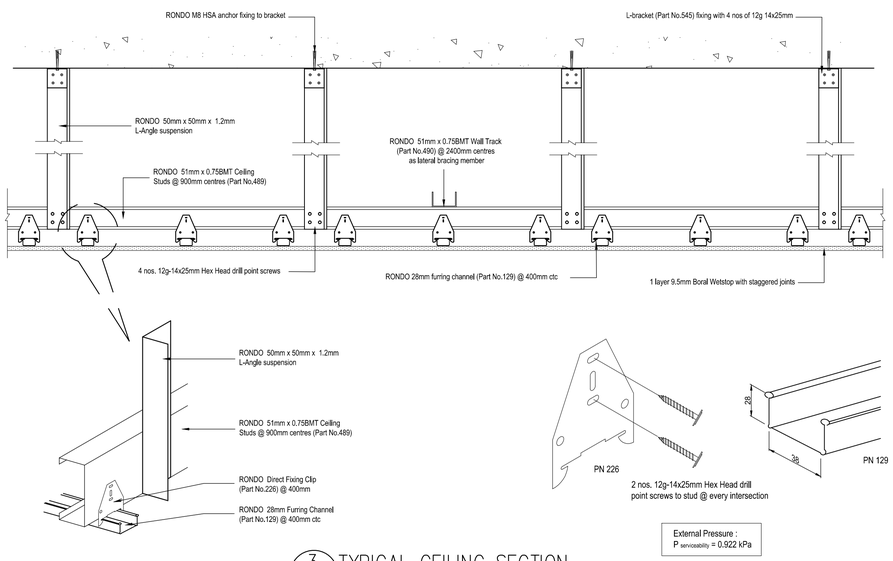

3 TYPICAL CEILING SECTION

SCALE = N.T.S

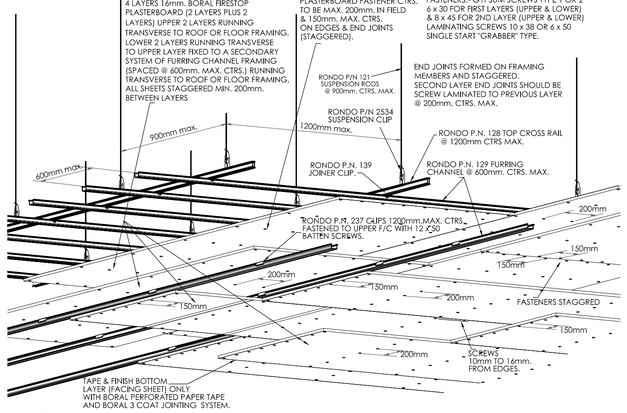

6 PERSPECTIVE VIEW -2 HOUR FIRE RATED CEILING

SCALE = N.T.S

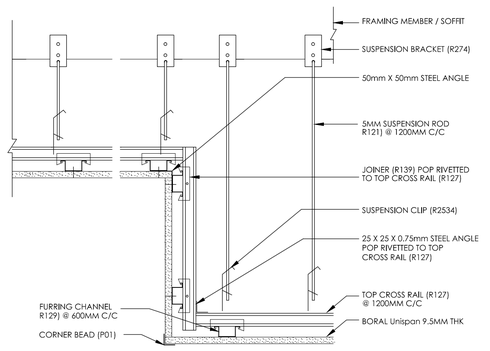

4 TYPICAL CEILING DROP DETAIL

SCALE = N.T.S

(MATERIAL REFER CEILING LAYOUT)

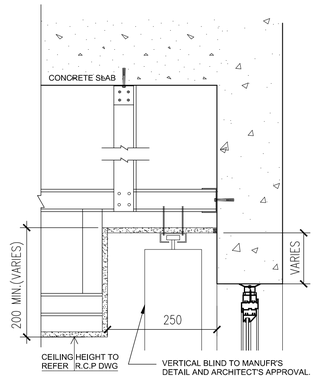

5 TYPICAL CEILING PELMET DETAIL

SCALE = N.T.S

(MATERIAL REFER CEILING LAYOUT)

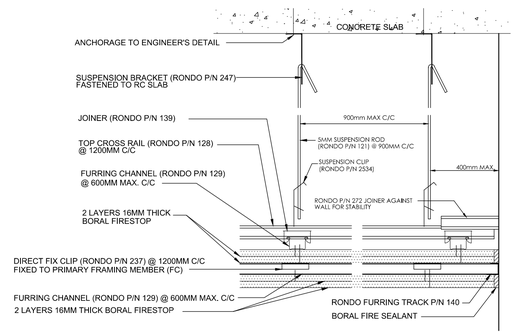

*NOTE: MASS OF SYSTEM - APPROX. 52KG/M2

7 BORAL 2HR FIRE RATED CEILING

SCALE = N.T.S

(USING RONDO KEYLOCK SYSTEM)